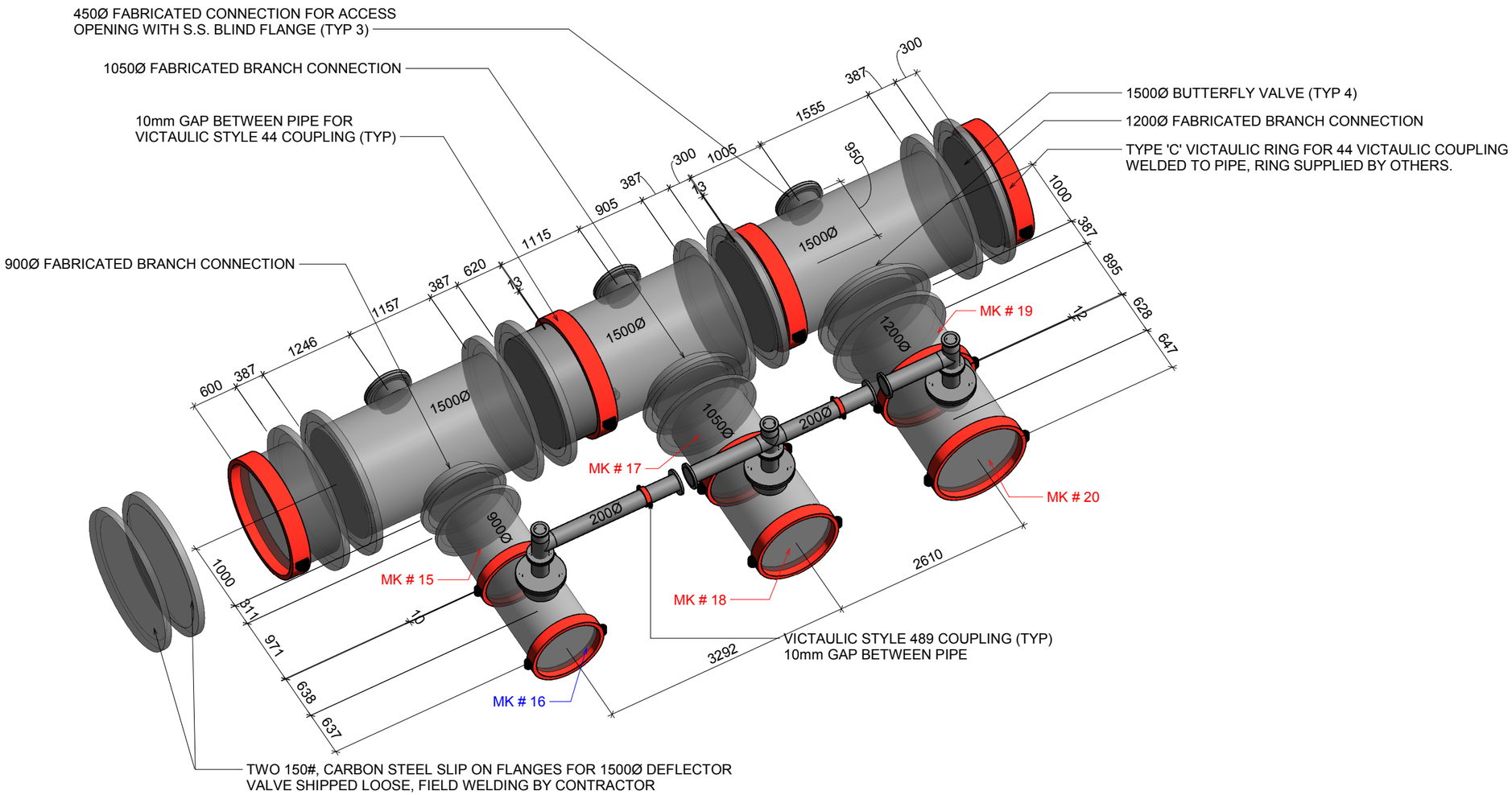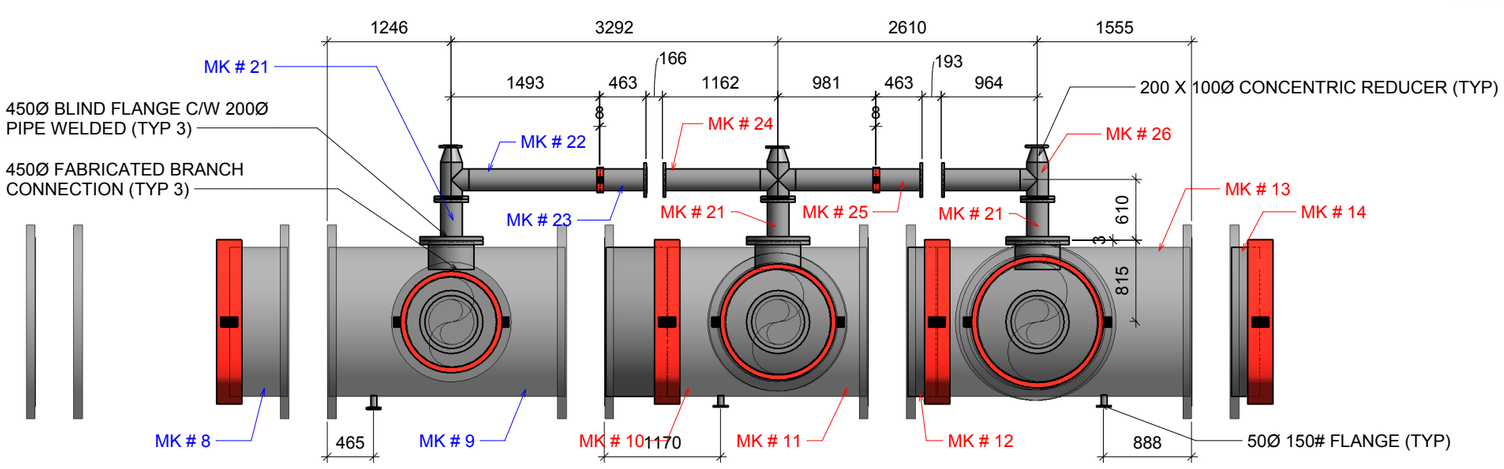1500Ø MAIN IN VALVEHOUSE